TAYLOR Entrance Systems™

AMERICA'S DOORMAKER
631 N. FIRST ST. WEST BRANCH, MI 48661

TAYLOR OPAQUE STEEL EDGE DOOR UTILIZING FIXED STEEL DOOR FRAME

INSWING / OUTSWING "IMPACT"

L. F. SCHMIDT LICENSE No. 43409 STATE OF FLORIDA PROFESSIONAL ENGINEER

Digitally signed by Lyndon F Schmidt
Date: 2026.07.22 08:41:05 -04'00'

This item has been digitally signed and sealed by **L. F. Schmidt, P.E.** on the date adjacent to the seal.
Printed copies of this document are not considered signed and sealed and the signature must be verified on any electronic copies.

THIS PRODUCT APPROVAL IS VALID ONLY FOR THE STATE OF FLORIDA

GENERAL NOTES

1. This product has been evaluated and is in compliance with the 9th Edition (2026) Florida Building Code (FBC) structural requirements including the "High Velocity Hurricane Zone" (HVHZ).
2. Product anchors shall be as listed and spaced as shown on details. Anchor embedment to base material shall be beyond wall dressing or stucco.
3. When used in the "HVHZ" this product complies with Section 1626 of the Florida Building Code and does not require an impact resistant covering.
3. When used in areas requiring wind borne debris protection this product complies with FBC Sections 1609.1.2 & R301.2.1.2 and does not require an impact resistant covering. This product meets missile level "D" and includes Wind Zone 4 as defined in ASTM E1996.
4. Site conditions that deviate from the details of this drawing require further engineering analysis by a licensed engineer or registered architect.
5. Configurations utilizing the high-dam outswing bump threshold (item #30) meet water infiltration requirements for the "HVHZ".
6. Configurations utilizing inswing threshold (item #31), outswing threshold (item #32) and the ADA threshold (item #33), do not meet the water infiltration requirements for the "HVHZ". These units shall be installed only in non-habitable areas or at habitable locations protected by an overhang or canopy such that the angle between the edge of canopy or overhang to sill is less than 45 degrees.
8. When used in the "HVHZ", steel must be protected as specified in FBC Section 2222.6.

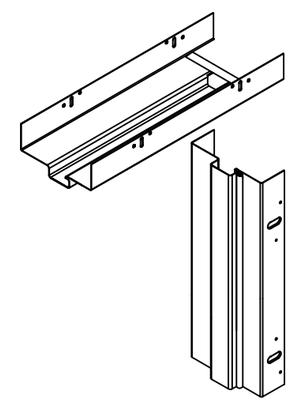

FIXED FRAME
IDP ENTRY-FIT™ (F-SERIES)

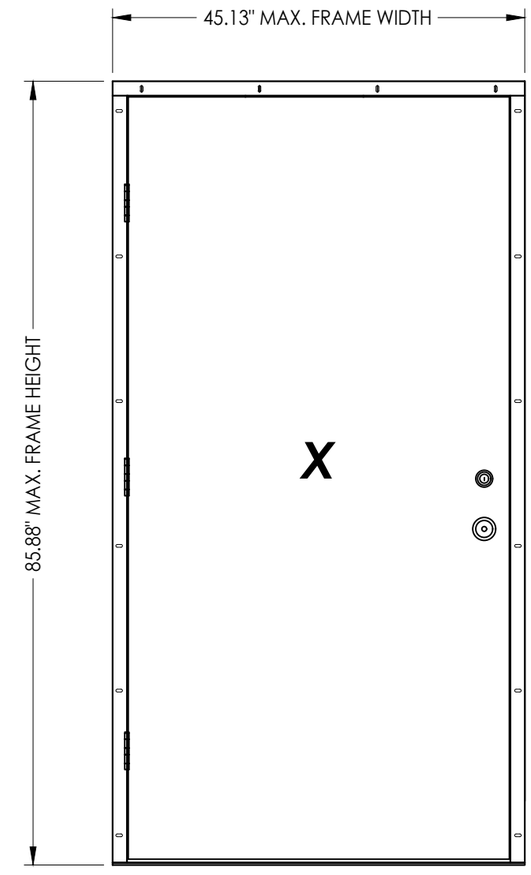

OVERALL FRAME DIMENSION	DESIGN PRESSURE (PSF)	
	POSITIVE	NEGATIVE
45.13" X 85.88"	+ 60.0	- 60.0

TABLE OF CONTENTS

SHEET#	DESCRIPTION
1	Typical elevations, design pressures & general notes
2	Door panel details
3	Corner detail
4	Horizontal cross section
5	Vertical cross sections
6	Buck and frame anchoring
7	Bill of materials and components

Documents Prepared By:
Lyndon F. Schmidt
P.E. No. 43409
R.W. BUILDING CONSULTANTS, INC.
P.O. Box 230, Valrico, FL 33595
Phone No.: 813.659.9197
FBPE Registry No. 9813

PRODUCT: TAYLOR STEEL DOOR

PART OR ASSEMBLY: TYPICAL ELEVATION, DESIGN PRESSURE & GENERAL NOTES

NO.	DATE	BY
8	7/03/26	LFS
7	12/15/25	LFS
6	7/06/23	LFS
5	7/20/20	LFS
4	7/20/17	JK

REVISIONS

UPDATE TO 9TH ED. (2026) FBC
ADD DOOR PANEL OPTIONS
UPDATE TO 8TH ED. (2023) FBC
UPDATE TO 7TH ED. (2020) FBC
UPDATE TO 6TH ED. (2017) FBC

DATE: 4/11/11
SCALE: N.T.S.
DWG. BY: JK
CHK. BY: LFS
DRAWING NO.: FL-14513.2
SHEET 1 OF 7

© 2011 R.W. BUILDING CONSULTANTS INC.

Z:\2023 FBC Drawings\Taylor Entrance Systems\FL-14513 R7\FL-14513.1-2.dwg

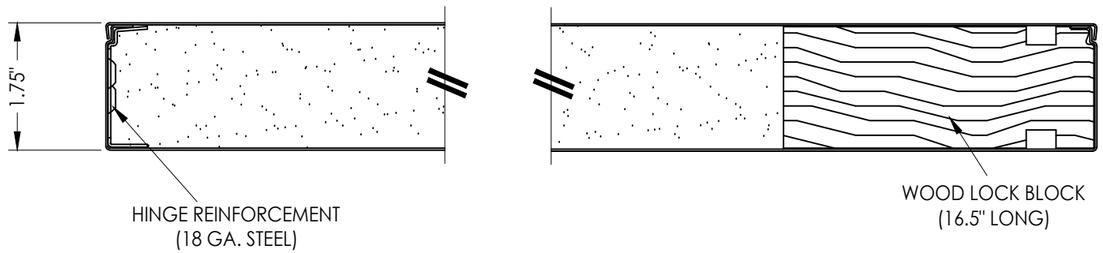

1/2 HORIZONTAL CROSS SECTION

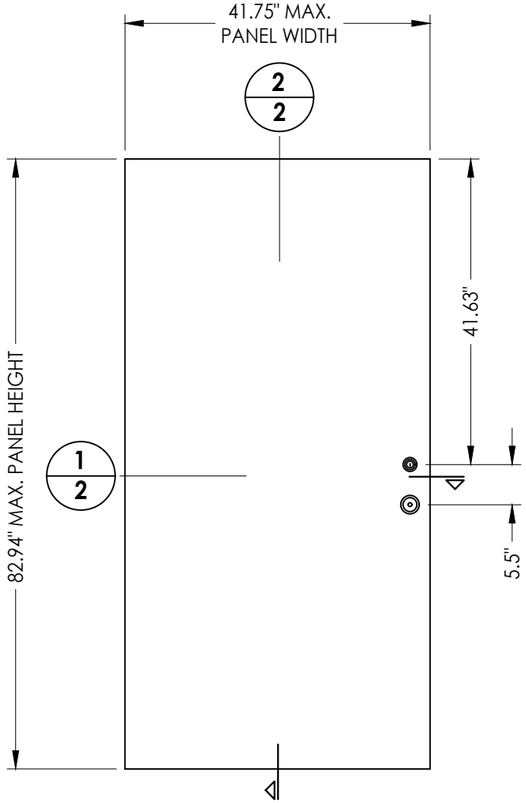

40 DOOR PANEL
Steel (Taylor)

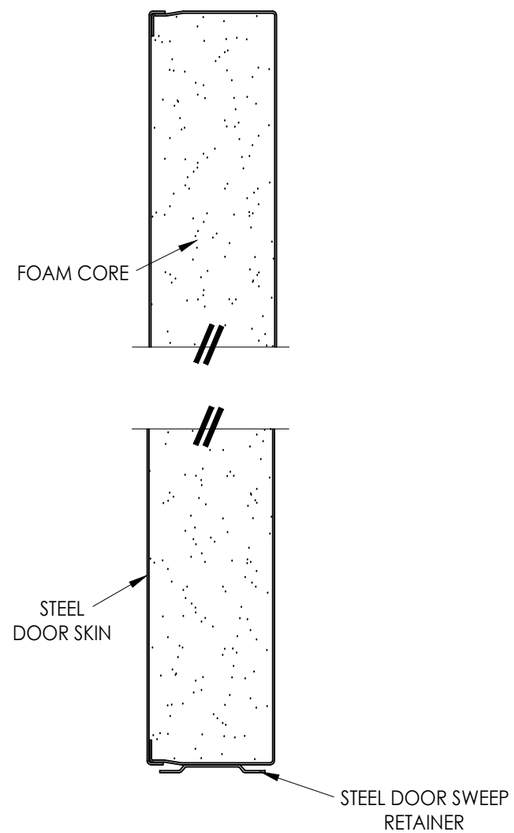

2/2 VERTICAL CROSS SECTION

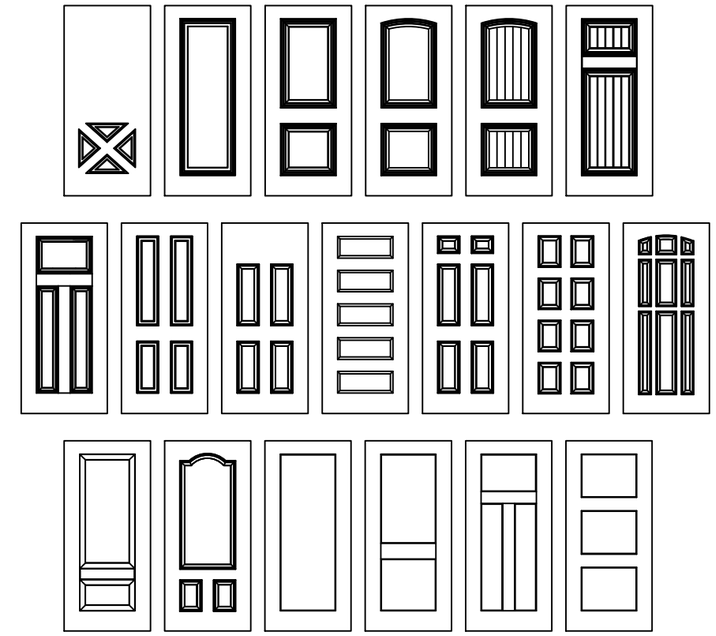

Taylor Opaque Door Panel Options

Products approved include all embossed and recessed panel doors.
Panels shown are for illustration and are representative only.

STEEL DOOR SKIN: MIN. 0.020" THK. GALVANIZED STEEL (Fy = 33,000 PSI MIN.)
CORE MATERIAL: POLYURETHANE FOAM (2 lbs/FT³ DENSITY)

Documents Prepared By:
Lyndon F. Schmidt
P.E. No. 43409
R.W. BUILDING CONSULTANTS, INC.
P.O. Box 230, Valrico, FL 33595
Phone No.: 813.659.9197
FBPE Registry No. 9813

PRODUCT: TAYLOR STEEL DOOR

PART OR ASSEMBLY: DOOR PANEL DETAILS

REVISIONS

NO.	DATE		BY
8	7/03/26	UPDATE TO 9TH ED. (2026) FBC	LFS
7	12/15/25	ADD DOOR PANEL OPTIONS	LFS
6	7/06/23	UPDATE TO 8TH ED. (2023) FBC	LFS
5	7/20/20	UPDATE TO 7TH ED. (2020) FBC	LFS
4	7/20/17	UPDATE TO 6TH ED. (2017) FBC	JK

DATE: 4/11/11
SCALE: N.T.S.
DWG. BY: JK
CHK. BY: LFS
DRAWING NO.: FL-14513.2
SHEET 2 OF 7

© 2011 R.W. Building Consultants Inc.

Z:\2023 FBC Drawings\Taylor Entrance Systems\FL-14513 R7\FL-14513.1-2.dwg

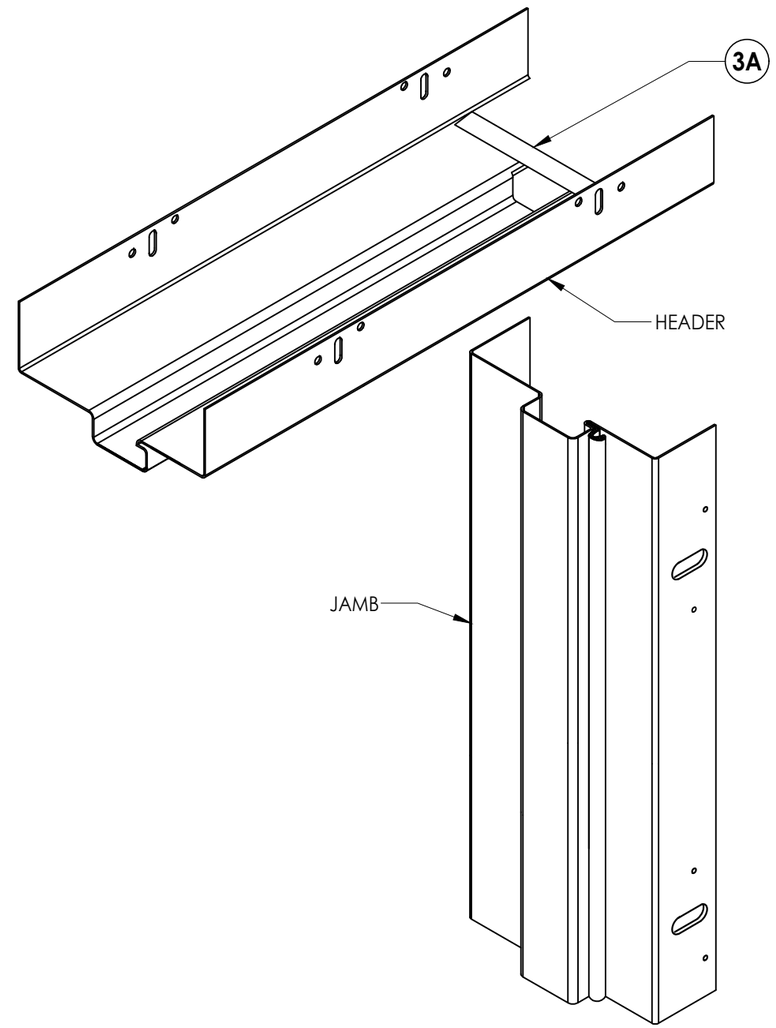

CORNER DETAIL

IDP ENTRY-FIT™ FIXED
STEEL DOOR FRAME (F-SERIES)

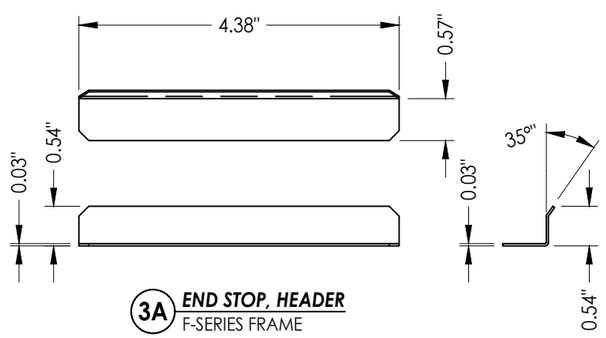

3A ***END STOP, HEADER***
F-SERIES FRAME

Documents Prepared By:
Lyndon F. Schmidt
P.E. No. 43409

RW BUILDING CONSULTANTS, INC.
P.O. Box 230, Valrico, FL 33595
Phone No.: 813.659.9197
FBPE Registry No. 9813

PRODUCT: *TAYLOR STEEL DOOR*

PART OR ASSEMBLY: *CORNER DETAIL*

NO.	DATE	REVISIONS	BY
8	7/03/26	UPDATE TO 9TH ED. (2026) FBC	LFS
7	12/15/25	ADD DOOR PANEL OPTIONS	LFS
6	7/06/23	UPDATE TO 8TH ED. (2023) FBC	LFS
5	7/20/20	UPDATE TO 7TH ED. (2020) FBC	LFS
4	7/20/17	UPDATE TO 6TH ED. (2017) FBC	JK

DATE: 4/11/11
SCALE: N.T.S.
DWG. BY: JK
CHK. BY: LFS
DRAWING NO.: FL-14513.2
SHEET 3 OF 7

© 2011 R.W. Building Consultants Inc.

Z:\2023 FBC Drawings\Taylor Entrance Systems\FL-14513 R7\FL-14513.1-2.dwg

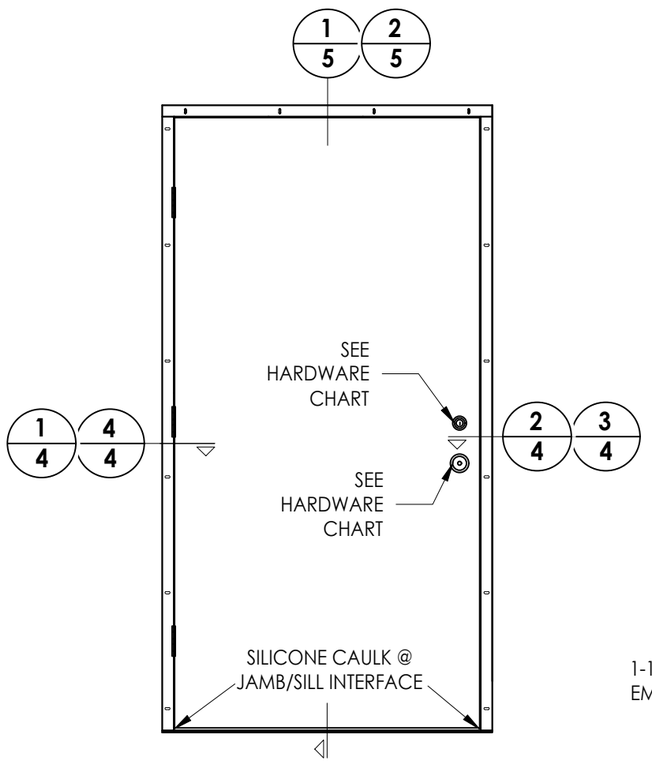

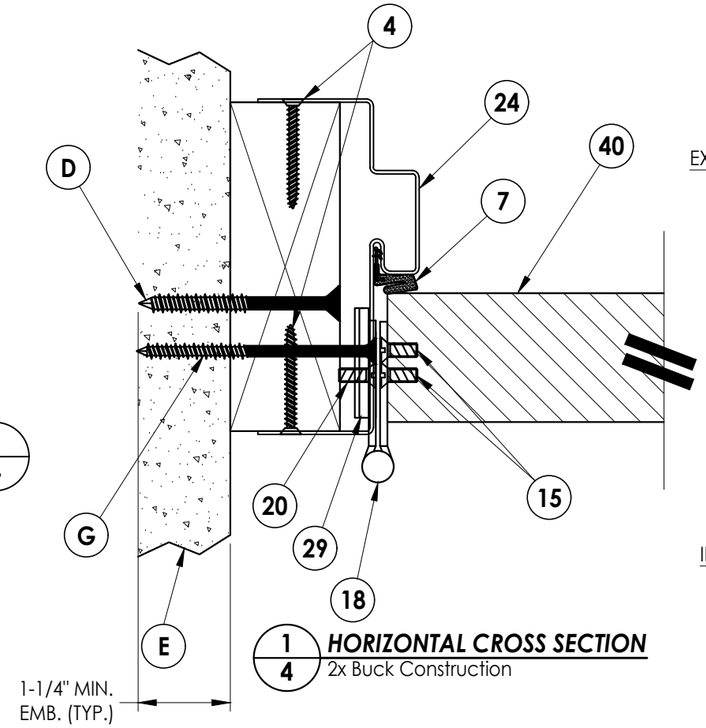

1/4 **HORIZONTAL CROSS SECTION**
2x Buck Construction

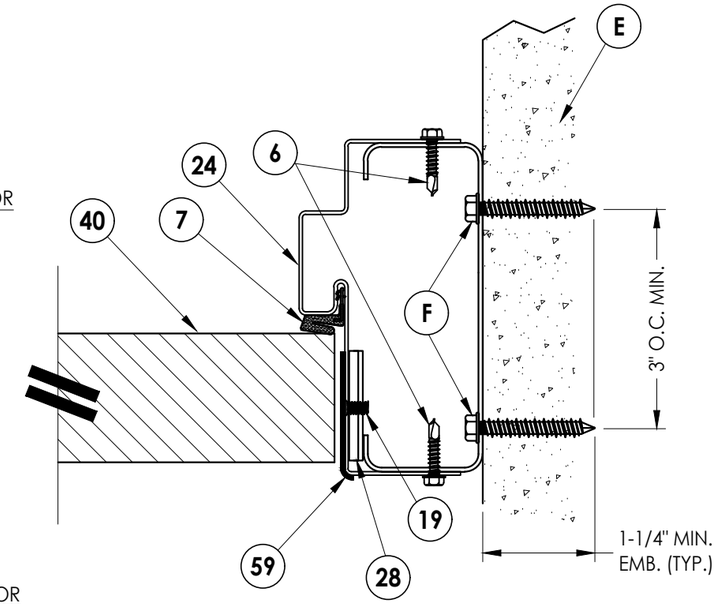

2/4 **HORIZONTAL CROSS SECTION**
Metal Stud Construction

EXTERIOR

INTERIOR

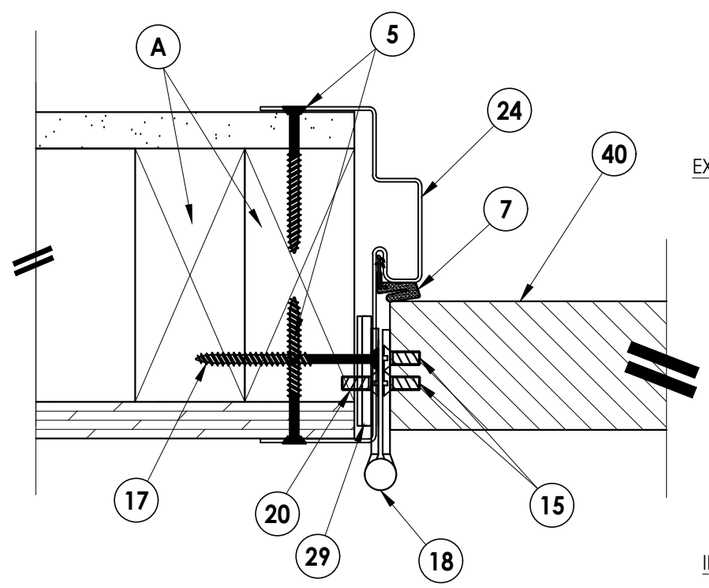

4/4 **HORIZONTAL CROSS SECTION**
2x Stud Construction

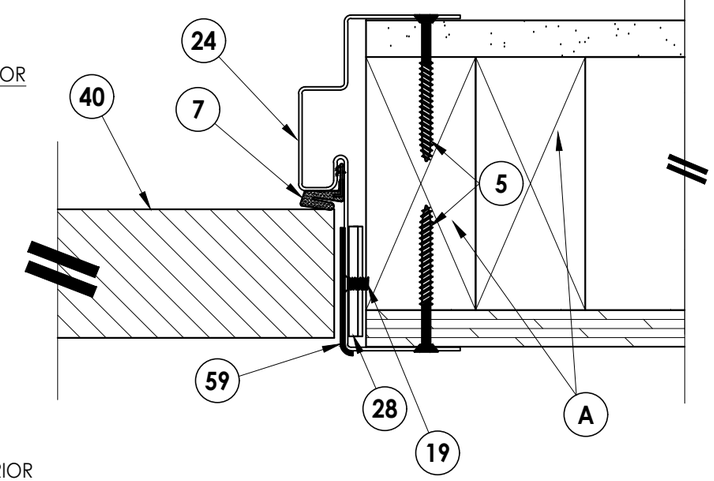

3/4 **HORIZONTAL CROSS SECTION**
2x Stud Construction

HARDWARE CHART		
MANUFACTURER	MODEL	
KWIKSET	LOCK:	SIGNATURE SERIES
	DEADBOLT:	SIGNATURE SERIES (980)
SCHLAGE	LEVER:	"F" SERIES
	DEADBOLT:	B300

Documents Prepared By:
Lyndon F. Schmidt
P.E. No. 43409
R.W. BUILDING CONSULTANTS, INC.
P.O. Box 230, Valrico, FL 33595
Phone No.: 813.659.9197
FBPE Registry No. 9813

PRODUCT: TAYLOR STEEL DOOR

PART OR ASSEMBLY: HORIZONTAL CROSS SECTION

REVISIONS

NO.	DATE		BY
8	7/03/26	UPDATE TO 9TH ED. (2026) FBC	LFS
7	12/15/25	ADD DOOR PANEL OPTIONS	LFS
6	7/06/23	UPDATE TO 8TH ED. (2023) FBC	LFS
5	7/20/20	UPDATE TO 7TH ED. (2020) FBC	LFS
4	7/20/17	UPDATE TO 6TH ED. (2017) FBC	JK

DATE: 4/11/11
SCALE: N.T.S.
DWG. BY: JK
CHK. BY: LFS
DRAWING NO.: FL-14513.2
SHEET 4 OF 7

© 2011 R.W. BUILDING CONSULTANTS INC.

Z:\2023 FBC Drawings\Taylor Entrance Systems\FL-14513 R7\FL-14513.1-2.dwg

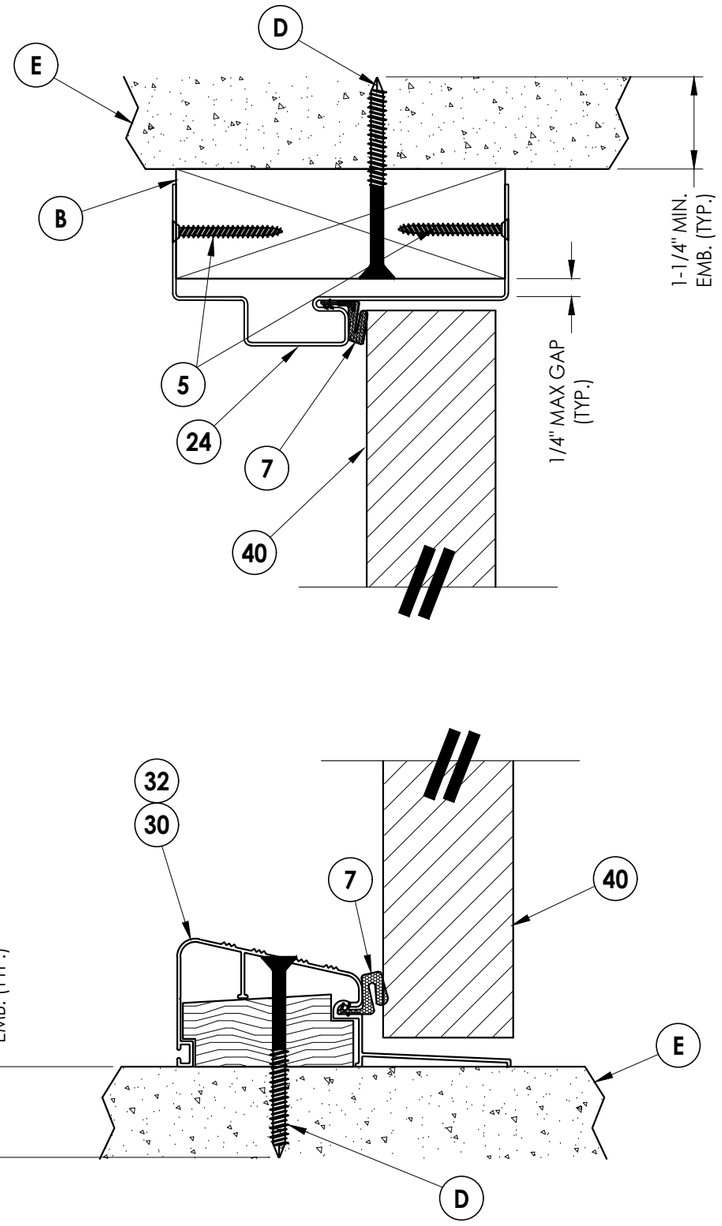

1/5 **VERTICAL CROSS SECTION**
Outswing

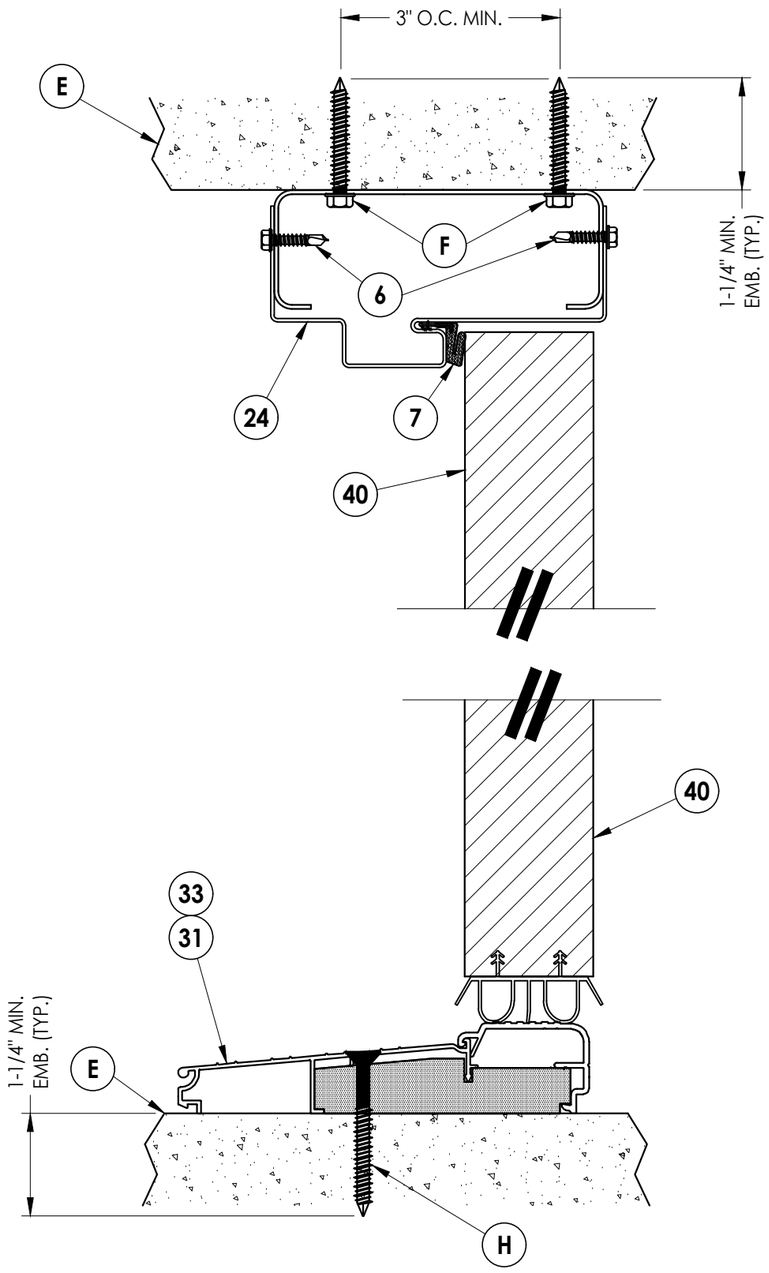

2/5 **VERTICAL CROSS SECTION**
Inswing

Z:\2023 FBC Drawings\Taylor Entrance Systems\FL-14513 R7\FL-14513.1-2.dwg

Documents Prepared By:
Lyndon F. Schmidt
P.E. No. 43409

RW BUILDING CONSULTANTS, INC.
P.O. Box 230, Valrico, FL 33595
Phone No.: 813.659.9197
FBPE Registry No. 9813

PRODUCT: TAYLOR STEEL DOOR

PART OR ASSEMBLY: VERTICAL CROSS SECTION

REVISIONS

NO.	DATE		BY
8	7/03/26	UPDATE TO 9TH ED. (2026) FBC	LFS
7	12/15/25	ADD DOOR PANEL OPTIONS	LFS
6	7/06/23	UPDATE TO 8TH ED. (2023) FBC	LFS
5	7/20/20	UPDATE TO 7TH ED. (2020) FBC	LFS
4	7/20/17	UPDATE TO 6TH ED. (2017) FBC	JK

DATE: 4/11/11
SCALE: N.T.S.
DWG. BY: JK
CHK. BY: LFS
DRAWING NO.: FL-14513.2
SHEET 5 OF 7

© 2011 R.W. Building Consultants Inc.

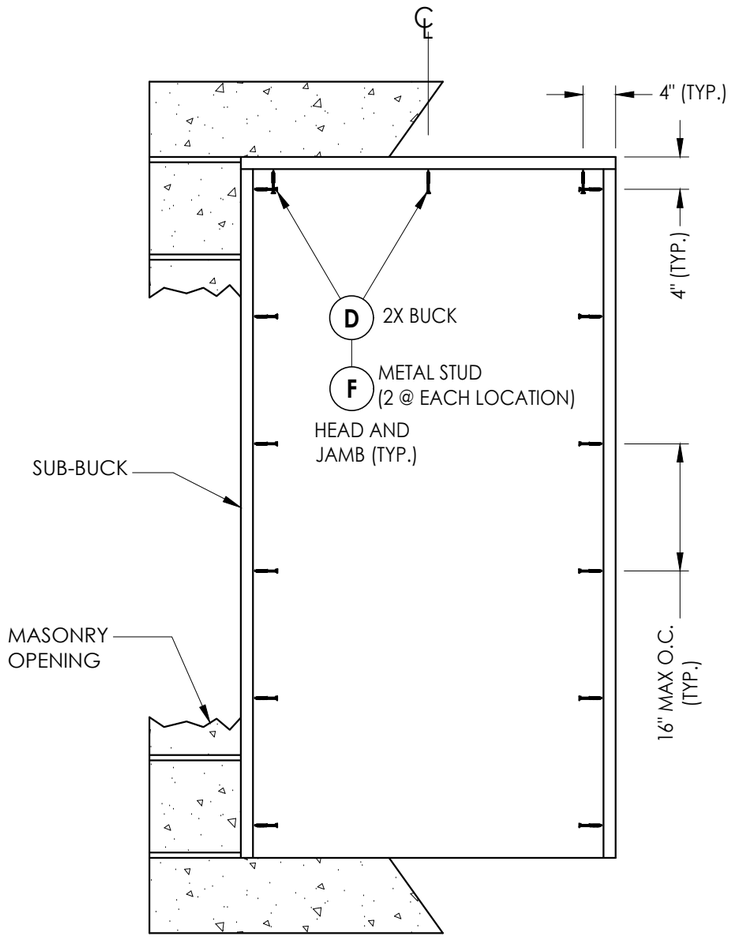

BUCK ANCHORING
Taylor Door

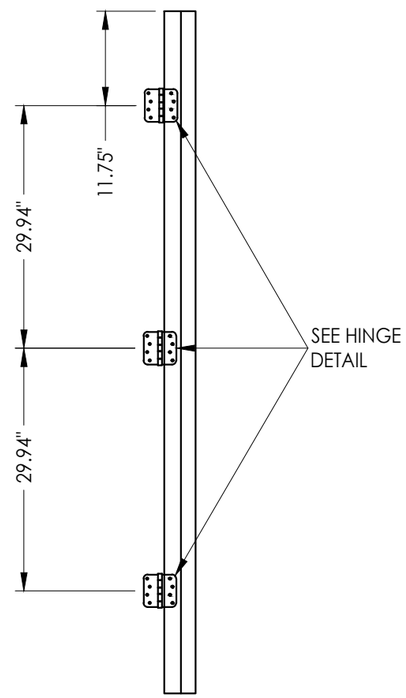

HINGE JAMB

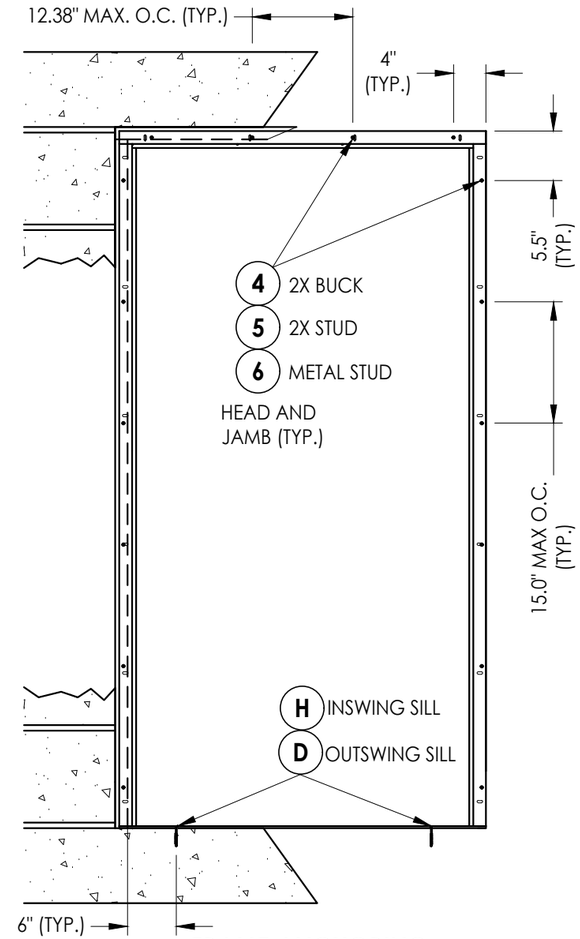

FRAME ANCHORING
Taylor Door

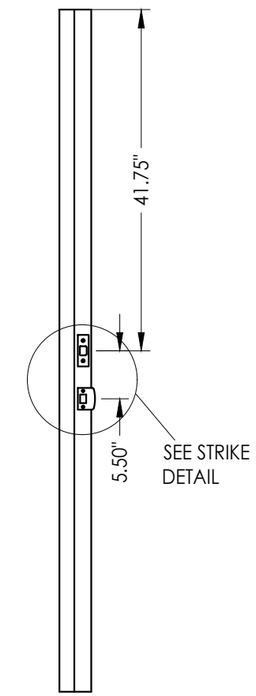

STRIKE JAMB

CONCRETE ANCHOR NOTES:

1. *Concrete anchor locations at the corners may be adjusted to maintain the min. edge distance to mortar joints.*
2. *Concrete anchor locations noted as "MAX. ON CENTER" must be adjusted to maintain the min. edge distance to mortar joints, additional concrete anchors may be required to ensure the "MAX. ON CENTER" dimension are not exceeded.*
3. *Concrete anchor table:*

ANCHOR TYPE	ANCHOR SIZE	MIN. EMBEDMENT	MIN. CLEARANCE TO MASONRY EDGE	MIN. CLEARANCE TO ADJACENT ANCHOR
ITW TAPCON®	1/4"	1-1/4"	2"	4"
ELCO ULTRACON®	1/4"	1-1/4"	1"	4"
ITW TAPCON®	3/16"	1-1/4"	3"	1-1/2"

WOOD SCREW INSTALLATION NOTES:

1. *Maintain a minimum 5/8" edge distance, 1" end distance, & 1" o.c. spacing of wood screws to prevent the splitting of wood.*

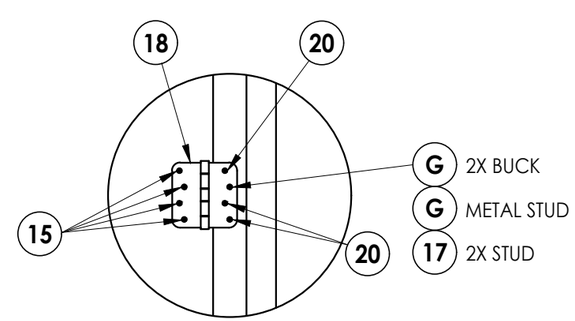

HINGE DETAIL

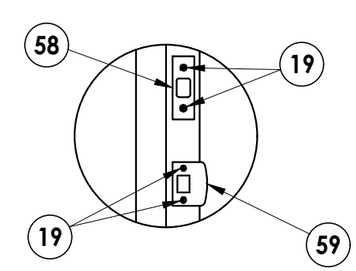

STRIKE PLATE DETAIL

Documents Prepared By:
Lyndon F. Schmidt
P.E. No. 43409
RW BUILDING CONSULTANTS, INC.
P.O. Box 230, Valrico, FL 33595
Phone No.: 813.659.9197
FBPE Registry No. 9813

PRODUCT: TAYLOR STEEL DOOR

PART OR ASSEMBLY: BUCK AND FRAME ANCHORING

NO.	DATE	REVISIONS	BY
8	7/03/26	UPDATE TO 9TH ED. (2026) FBC	LFS
7	12/15/25	ADD DOOR PANEL OPTIONS	LFS
6	7/06/23	UPDATE TO 8TH ED. (2023) FBC	LFS
5	7/20/20	UPDATE TO 7TH ED. (2020) FBC	LFS
4	7/20/17	UPDATE TO 6TH ED. (2017) FBC	JK

DATE: 4/11/11
SCALE: N.T.S.
DWG. BY: JK
CHK. BY: LFS
DRAWING NO.: FL-14513.2
SHEET 6 OF 7

© 2011 R.W. Building Consultants Inc.

Z:\2023 FBC Drawings\Taylor Entrance Systems\FL-14513 R7\FL-14513.1-2.dwg

BILL OF MATERIALS

ITEM #	DESCRIPTION	MATERIAL
A	2X STUD FRAMING (G>= 0.55)	WOOD
B	2X BUCK (G >= 0.55)	WOOD
C	METAL STUD (SSMA STUD 550S162-54, Fy = 33 ksi, Fu = 45 ksi)	STEEL
D	1/4" X 2-3/4" ELCO OR ITW PFH CONCRETE SCREW	STEEL
E	MASONRY - 3,000 PSI MIN. CONCRETE CONFORMING TO ACI 301 OR HOLLOW BLOCK CONFORMING TO ASTM C90	CONCRETE
F	3/16" X 1-3/4" HWH ITW CONCRETE SCREW	STEEL
G	3/16" X 3-1/4" ITW PFH CONCRETE SCREW	STEEL
H	1/4" X 2-1/4" ELCO OR ITW PFH CONCRETE SCREW	
4	#10 X 1-1/2" PFH SM SCREW (1.35" MIN. EMBEDMENT)	STEEL
5	#10 X 2" PFH SMS (1.35" MIN. EMBEDMENT)	STEEL
6	#10 X 3/4" HWH SELF-DRILLING TEK SCREW	STEEL
7	COMPRESSION WEATHERSTRIPPING QLON QDS 650 BY SCHLEGEL	-
15	10-24 X 5/8" PFH MS	STEEL
17	#10 X 2-1/2" PFH WS	STEEL
18	4.0" X 4.0" HINGE	STEEL
19	8-32 X 3/8" PFH MS	STEEL
20	10-24 X 1/2" PFH MS	STEEL
24	IDP (F-SERIES) FIXED FRAME (18 GA. - A60 GALVANNEALED STEEL)	STEEL
28	HINGE LATCH AND DEADBOLT REINFORCEMENT	STEEL
29	HINGE REINFORCEMENT	STEEL
30	OUTSWING THRESHOLD	ALUM/WOOD
31	INSWING THRESHOLD	ALUM/COMP
32	OUTSWING THRESHOLD	ALUM/COMP
33	ADA THRESHOLD	ALUM
40	TAYLOR STEEL DOOR - SEE DOOR PANEL DETAILS	-
58	STRIKE PLATE - DEADBOLT	STEEL
59	" T " STRIKE PLATE - LATCH	STEEL

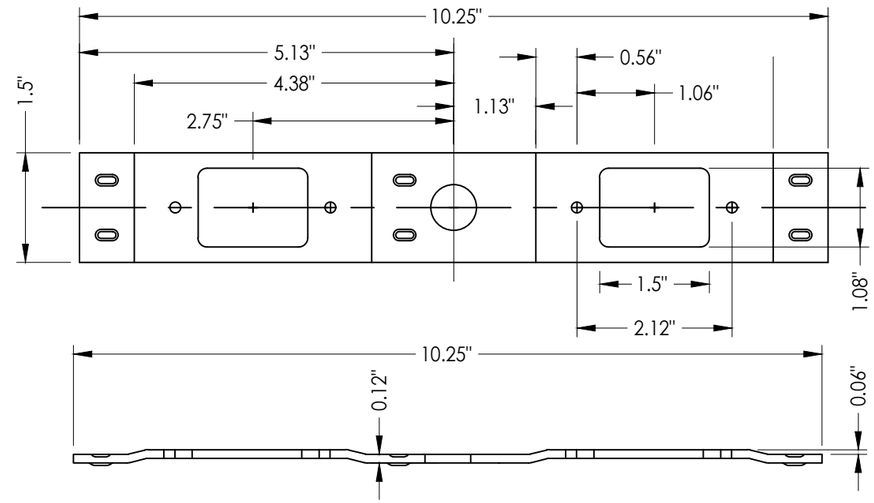

28 **STRIKE REINFORCEMENT**
Latch / Deadbolt

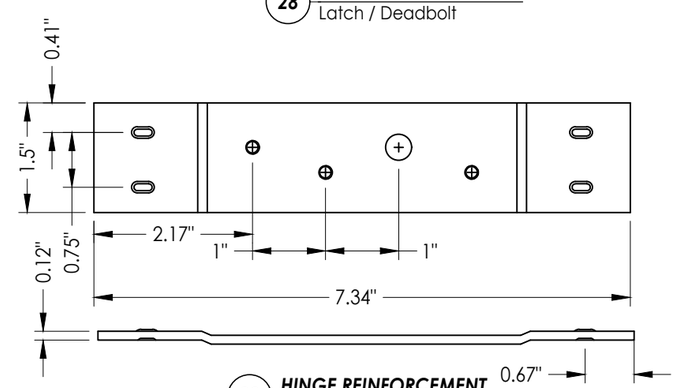

29 **HINGE REINFORCEMENT**

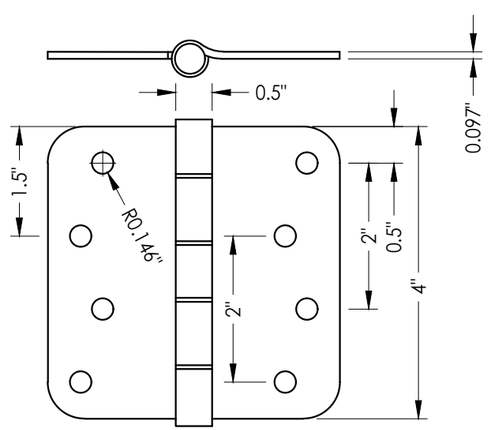

18 **HINGE**

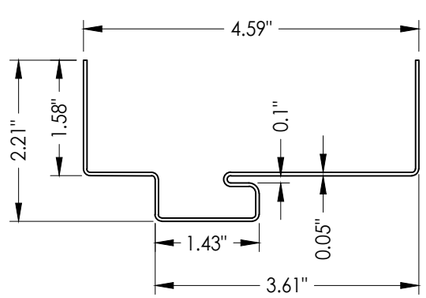

24 **FRAME**
F-Series

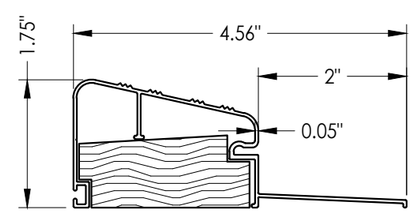

30 **OUTSWING THRESHOLD**
DLP

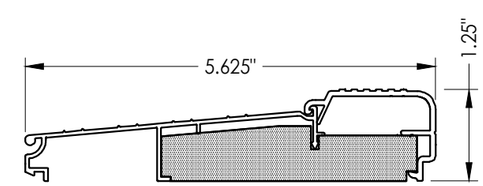

31 **INSWING THRESHOLD**
AFCO A-280

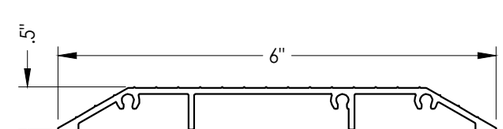

33 **ADA THRESHOLD**
AFCO A-202

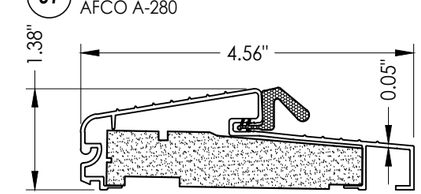

32 **OUTSWING THRESHOLD**
AFCO A-496

Documents Prepared By:
Lyndon F. Schmidt
P.E. No. 43409

RW BUILDING CONSULTANTS, INC.
P.O. Box 230, Valrico, FL 33595
Phone No.: 813.659.9197
FBPE Registry No. 9813

PRODUCT: TAYLOR STEEL DOOR

PART OR ASSEMBLY: BILL OF MATERIALS AND COMPONENTS

NO.	DATE	REVISIONS	BY
8	7/03/26	UPDATE TO 9TH ED. (2026) FBC	LFS
7	12/15/25	ADD DOOR PANEL OPTIONS	LFS
6	7/06/23	UPDATE TO 8TH ED. (2023) FBC	LFS
5	7/20/20	UPDATE TO 7TH ED. (2020) FBC	LFS
4	7/20/17	UPDATE TO 6TH ED. (2017) FBC	JK

DATE: 4/11/11
SCALE: N.T.S.
DWG. BY: JK
CHK. BY: LFS
DRAWING NO.: FL-14513.2
SHEET 7 OF 7

© 2011 R.W. BUILDING CONSULTANTS INC.

Z:\2023 FBC Drawings\Taylor Entrance Systems\FL-14513 R7\FL-14513.1-2.dwg